Review of multi-parameter fiber grating sensors

Eric Udd
Columbia Gorge Research, LLC, PO Box 382, 2555 NE 205th Ave, Fairview, OR 97024

ABSTRACT

Fiber optic grating sensors have been widely used to support the measurement of strain and temperature. By appropriately constructing fiber gratings it is possible to simultaneously measure two or more environmental parameters simultaneously. This in turn results in the realization of a host of new sensing possibilities including multi-dimensional strain, shear strain in bond lines, imaging of damage in composite materials via "strain imaging" and fiber grating sensors that are capable of compensating for temperature while measuring pressure, corrosion and other environmental effects. This paper will review some of these capabilities.

Keywords: fiber gratings, multiaxis strain, shear strain, pressure, temperature

1. INTRODUCTION

Many of the measurement performed today using fiber grating strain sensors are directed toward the measurement of longitudinal strain or temperature. These devices compete mainly with electrical strain gauges. These devices cost about $20 each and typically have gauge lengths of 0.5 to 1 cm. The vast majority of these devices are surface mounted and the procedure for mounting them involves preparing a flat surface, often with sanding, followed by cleaning, an acid wash, gluing the strain gauge to the surface and attaching electrical leads. The process with a skilled technician takes about an hour per gauge, adding perhaps $25 to $50 to the cost of each sensor. The electrical strain gauges are then attached to electronic demodulators such as a Wheatstone bridge, which costs anywhere from $300 to over $2000 per channel, depending on the performance and features of the unit. Issues associated with conventional strain gauges include (1) the strain gauges falling off or partially detaching from the surface on which they are mounted, (2) limited temperature ranges, (3) susceptibility to electromagnetic interference, (4) difficulties associated with embedding them into composite and metallic materials and (5) multiplexing difficulties.

Currently fiber optic grating based strain sensors cost from $80 to over $500 each in small quantities and are supported by fiber grating based demodulators ranging in cost from about $10,000 to over $40,000 that can support 1 to over 100 longitudinal strain and temperature measurements. The price of the fiber gratings is substantially lower in quantities of 100, on the order of $50 to $200 per item and as companies start to move toward mass production of these items, their cost should rapidly approach the $20 target offered by electrical foil gauges.

While progress is being made to introduce fiber grating sensor technology [1-4] into civil structures, ground testing of aerospace vehicles and the oil and gas industry, the pace has been relatively slow. What is needed is needed to enhance the pace at which the technology is adopted involves additional differentiation from electrical strain gauge capabilities. An example is transverse strain and multiaxis single point strain capability. This differentiating item can be realized for small cost premiums associated with polarization preserving fiber.

2. LONGITUDINAL STRAIN AND TEMPERATURE

Since the period of the fiber grating [5] is written along its length, environmental effects that cause elongation of the fiber will change the period and the wavelength band that the fiber grating reflects and transmits. Two of the principle environmental effects that cause this change are temperature and longitudinal strain[2]. Other types of environmental effects can be measured such as magnetic field or pressure by designing coatings or transducers that will convert these effects into strain on the fiber.

The usual problem is to separate strain and temperature so that strain can be accurately measured. One approach[2] to this problem is to put two fiber gratings in close proximity to one another with one attached to the material on which strain is

Fiber Optic Sensors and Applications V, edited by Eric Udd, Proc. of SPIE
Vol. 6770, 677002, (2007) · 0277-786X/07/$18 · doi: 10.1117/12.753525

to be measured and the other nearby but not attached to the material so that it floats and is not subject to strain. Another method is to use fiber gratings in combination with another fiber sensor that measures temperature only. The Raman scattering based optical time domain reflectometer systems offered by York and Hitachi offer distributed temperature sensing along the length of the fiber. The main issue associated with both of these approaches is that the temperature of the fiber grating making the strain measurement may be substantially different from that of the spatially displaced "floating" fiber grating or the temperature indicated by the Raman scattering based temperature sensor which may have spatial resolution on the order of a meter or more. To overcome these problems an alternative is to write two fiber gratings of widely separated wavelengths on top of one another. By measuring the change in wavelength of both of these gratings with strain and temperature, one can establish two equations in two unknowns and solve for both quantities.

There are a number of problems associated with writing fiber gratings onto an ordinary single mode optical fiber. In order to allow the simultaneously measurement of both longitudinal strain and temperature the wavelengths have to be so widely separated using conventional single mode optical fiber that two light sources are required to enable a reasonably accurate measurement. Usually this has involved one light source operating at 800 nm while the other is at 1550 nm. This adds considerably to the cost and complexity of the system and the results are not nearly as good as can be obtained using two separated fiber gratings in close proximity, one attached to the structure and the other “floating” to measure temperature. The reason for the poor performance is that the inversion matrix associated with separating out strain and temperature is poorly conditioned even for widely separated wavelengths. Fortunately there are better means of measuring strain and temperature by writing a single fiber grating onto birefringent polarization preserving optical fiber. The inversion matrix associated with measurement of the two spectral peaks associated with the polarization axes of these fibers can be much better conditioned allowing accurate measurements to be made using a single light source. These and other applications of multi-parameter sensing will be reviewed in the following sections.

3. TWO PARAMETER STRAIN SENSING

Two parameter Fiber Bragg Grating Strain Sensors [6-8] are created by writing a single fiber Bragg grating onto polarization maintaining (PM) fiber. The grating is created in the optical fiber using a high intensity ultraviolet (UV) light source and a phase mask containing the grating pattern.

Figure 1 shows the main types of polarization maintaining (PM) fiber. These designs use stress-inducing claddings, which set up polarization axes in the fiber. The birefringence in the fiber is created with a built in residual stress introduced during the fiber draw. This birefringence results in a slight change in the index of refraction along two mutually orthogonal directions (termed the polarization axes.)

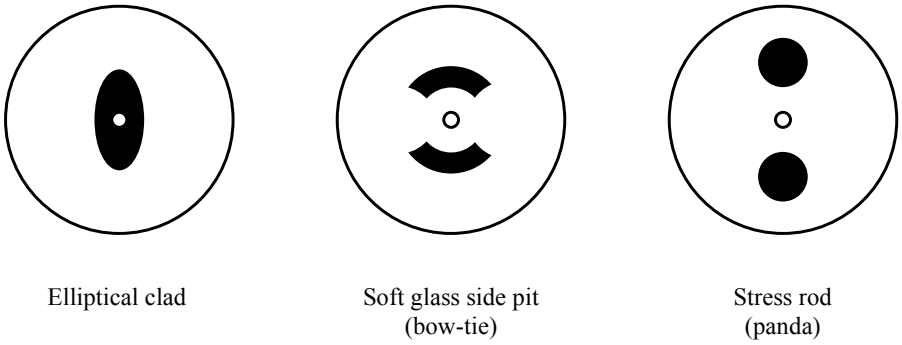

Figure 1. Types of polarization maintaining fiber

This creates two peaks, one associated with each polarization axis (Figure 2).

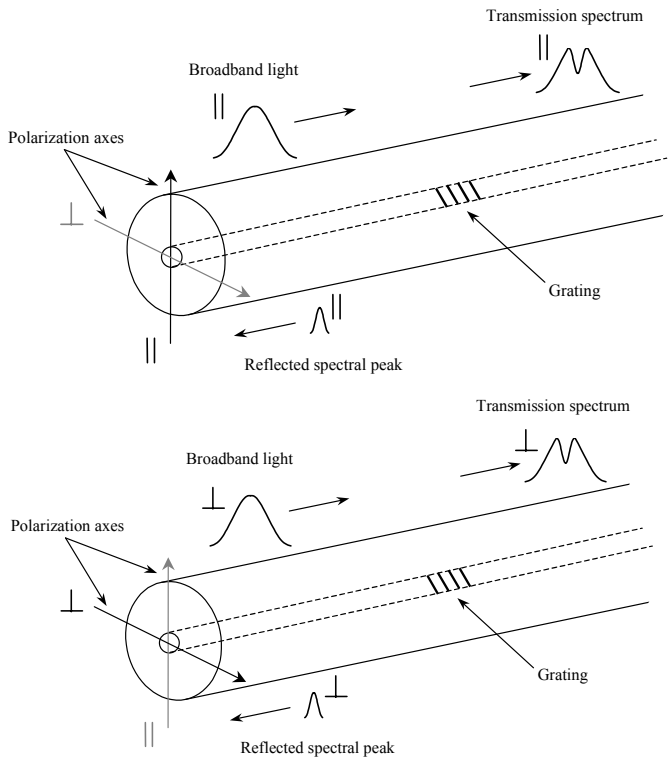

Figure 2. A single grating written onto polarization maintaining fiber will reflect two spectral peaks, one for each polarization axis

This combination of a single grating written onto PM fiber creates a sensor capable of sensing transverse strains and by measuring the interaction between the two reflected peaks (Figure 3).

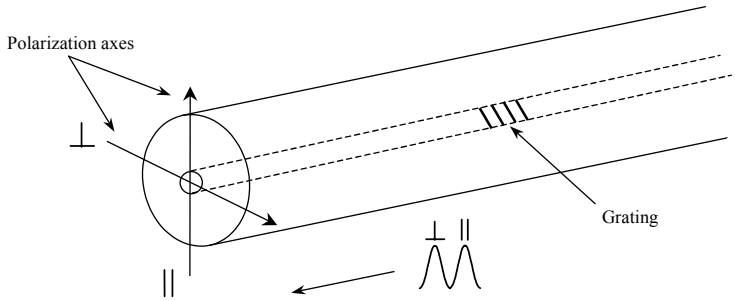

Figure 3. The resulting transverse strain sensor

As the sensor is loaded transversely, the peak-to-peak separation of the reflected peaks changes (Figure 4). This measurement of peak separation provides a quantitative measurement of transverse strain on the sensor.

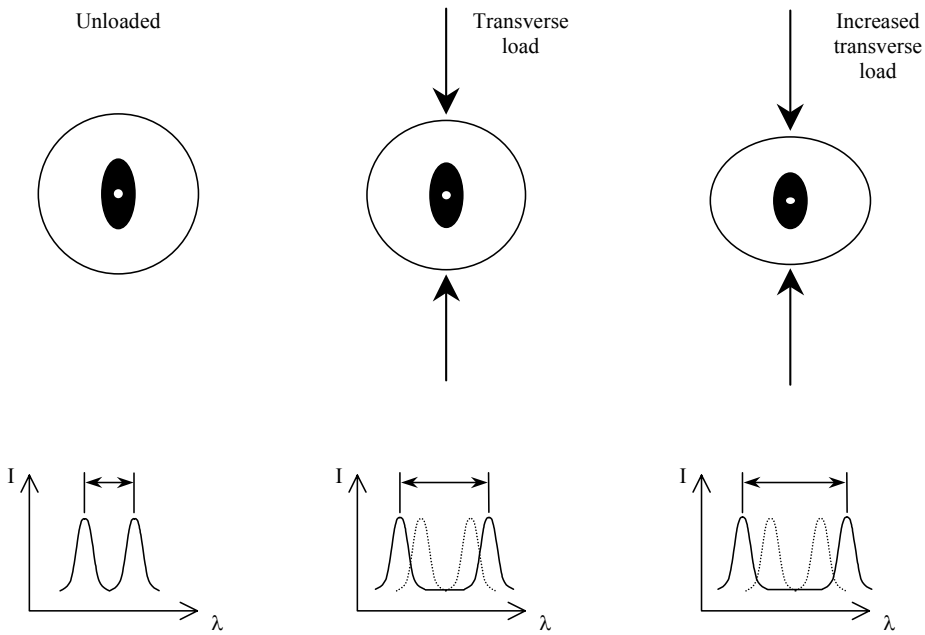

Figure 4. As the sensor is transversely strained, the separation of the two reflected spectral peaks changes

In addition to measuring transverse strain, the multi-axis fiber gratings are capable of measuring shear strain and transverse strain gradients. When uniform transverse strain is applied along the length of a multi-axis fiber grating sensor, the dual peak spectral structure of the fiber grating remains intact as shown in Figure 5. However, when the transverse loading is not uniformly applied, as would be the case when an adhesive bond starts to break up, the spectral peak corresponding to the axis on which non uniform load is applied starts to break up as is shown in Figure 6.

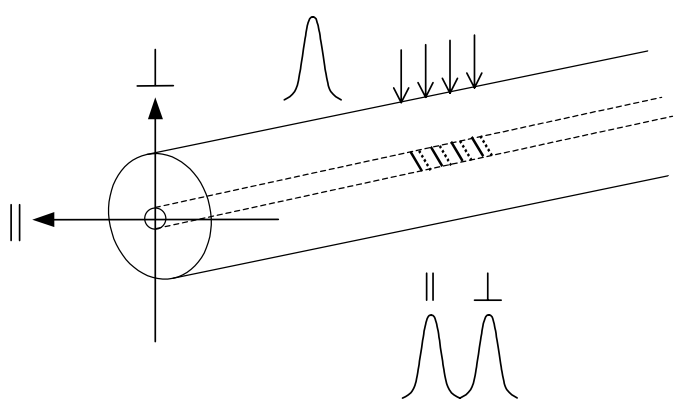

Figure 5. Uniform transverse load across a multi-axis fiber grating strain sensor does not distort the dual spectral peaks

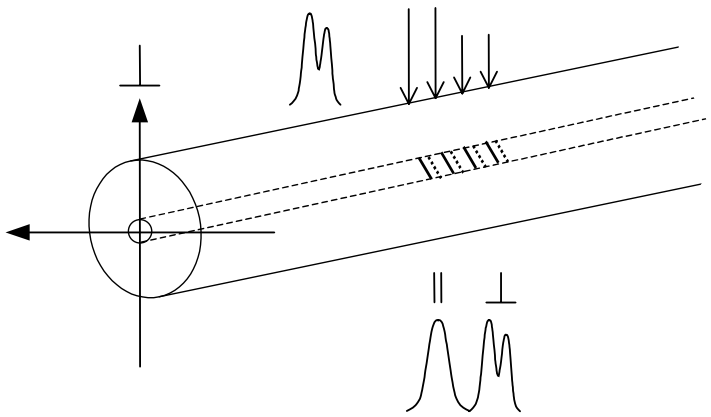

Figure 6. Non-uniform transverse load applied across a multi-axis fiber grating strain sensor results in the multiple peaks forming.

The change in transverse load across the fiber grating can be measured quantitatively by the splitting of the peak. The length of the fiber grating exposed to each load can be determined by the spectral intensity of the peaks.

Figure 7 provides an example of a bi-axial fiber grating strain sensor that has been placed on the edge of an adhesive bond [9] with its transverse sensing axes aligned to detect shear strain. As the bond is strained with increasing load the two principle peaks move apart indicating increasing shear strains. As the load level continues to increase the adhesive joint starts to degrade and the longer spectral peak breaks into two. The difference between the two new peaks is about 0.2 nm corresponding to a change 600 micro-strain. The magnitude of the two new peaks is approximately equal, which indicates that approximately half the length of the multi-axis fiber grating strain sensor has been unloaded. Overall spectral movement corresponds to axial strain or temperature changes. Since in this test the temperature is very nearly constant, the movement is axial strain primarily with 0.1 nm changes corresponding to 100 microstain. This example illustrates the ability of the multi-axis fiber grating strain sensor to measure shear strain, transverse strain, transverse strain gradients and axial strain.

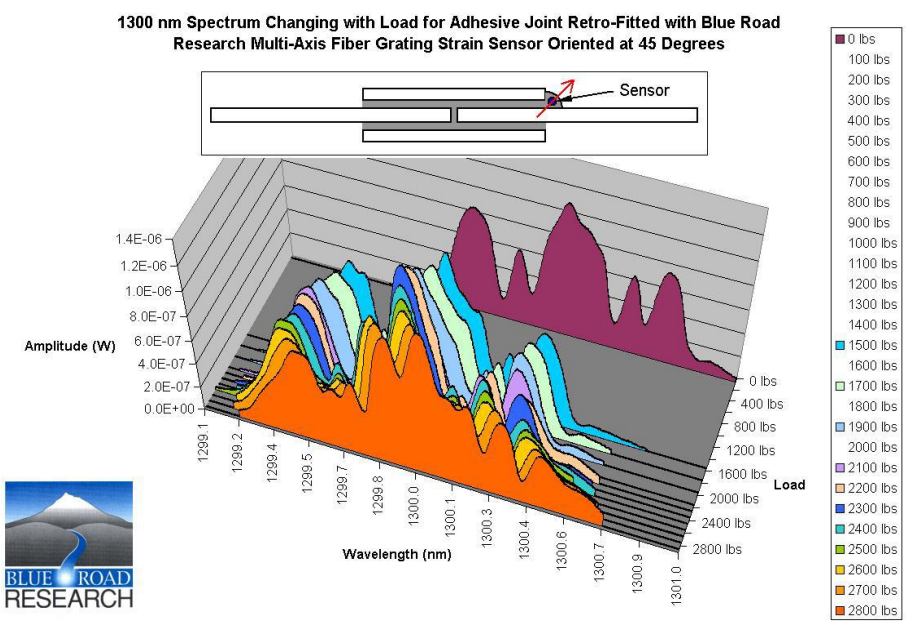

Figure 7. Monitoring an adhesive joint for axial and transverse strain using multi-axis fiber grating sensors. Shear strain and transverse strain gradients may also be detected

4. THREE AXIS STRAIN SENSING

A tri-axial fiber Bragg grating strain sensor [7-8] uses the same principle as the single axis sensor mentioned previously with the difference that a second grating at a different wavelength is written over the first grating and polarization preserving fiber is used. The two overlaid gratings are created in these optical fibers using a high intensity ultraviolet (UV) light source and a single phase mask containing the grating pattern for both wavelengths. Once the fiber is positioned, first one wavelength is written, then the other. Gratings written with different periods will reflect spectrally separated peaks (Figure 8). These gratings can be written onto the same point (dual overlaid) to provide point measurements.

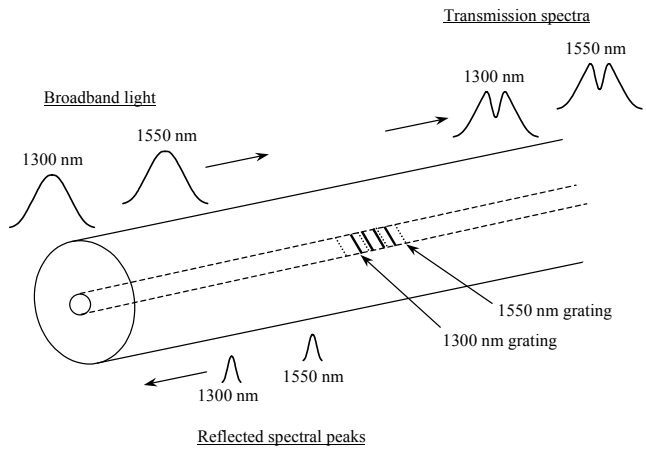

Figure 8. Dual overwritten gratings will each reflect a corresponding peak

Taking this further and showing the polarization axes of the fiber, the basis of a tri-axial sensor is formed (Figure 9).

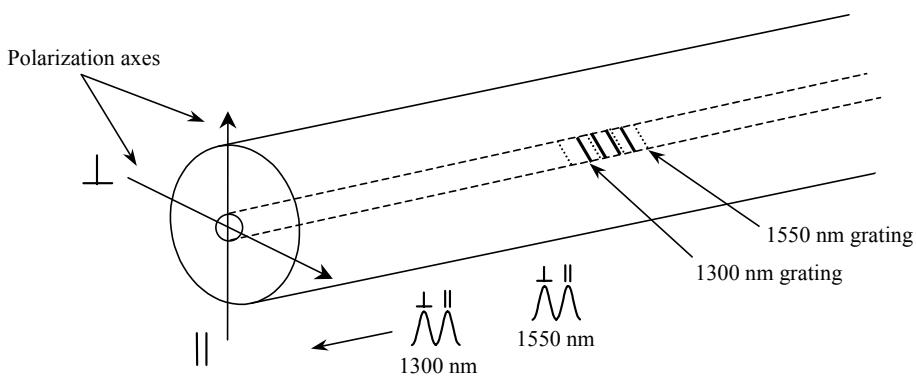

Figure 9. When two broadband light sources are guided into polarization maintaining fiber onto which two gratings are written, four peaks will be reflected (tri-axial sensor.)

This configuration results in four reflected peaks, two for each polarization axis. Similar to the single axis and bi-axis sensor, the reflected spectral peaks from the tri-axial sensor will shift with axial strain and temperature changes. In addition to this, transverse strain can be determined by measuring the peak to peak separation of the two peaks corresponding to the two mutually orthogonal polarization axes. Nominally for conventional polarization preserving

fiber with an overall diameter of 125 microns a change in peak to peak wavelength of 0.1 nm in the 1300 nm band corresponds to 300 to 400 micro-strain. A shift of 0.1 nm along the longitudinal axis is similar to that of conventional single mode optical fiber with a nominal value, in the 1300 nm band, of 100 micro-strain.

One fiber grating written into polarization maintaining fiber allows the measurement of two parameters simultaneously, which might be temperature and a strain component or two strain components. By writing more than one fiber grating into a polarization maintaining optical fiber additional parameters may be measured. In the case of two fiber gratings written at different wavelengths it is possible to generate a matrix of four equations and four unknowns relating the response of the optical fiber to the three axes of strain and temperature.

5. MONITORING OF COMPOSITE MATERIALS

As another example of the application of multi-parameter fiber grating sensors; polymer-matrix composites (PMCs) have been used in many military and civilian applications such as aircraft, unmanned air vehicles, and bridges for a number of years [9-10]. Sudden and unexpected failure of these systems can have catastrophic results in terms of degradation in performance and loss of life. The range of damage drivers that may apply includes various load-induced stresses, thermal expansion, moisture swelling, chemical attack, and material attrition. These drivers may interact in a complex and synergistic manner to produce time-dependent material property degradation. Different types of damage can be associated with these mechanisms depending on material properties, reinforcement and component geometry, and relevant damage drivers. In the majority of cases, damage varies with all three spatial dimensions and with time.

Textile composites become more applicable to these applications due to low cost processing and unique 3-D mechanical properties. Textile architectures include bi-axis weave, tri-axis weave, knit, braiding and other multi-axis constructions. Once the preform is formed, a composite can be manufactured by infiltrating resin through the preform using the liquid molding process. To take full advantage of PMC, the relationship between microstructure, mechanical property, and processing should be understood and established. Because of the sophisticated microstructure of these preforms, anisotropic mechanics that had been successfully used in analyzing laminated composites cannot be applied to textile composites. Textile microstructures depend on the type of textile used, machine setup, and properties of fibers, such as bundle size and elastic modulus. A microstructure map can be defined to relate textile process to the resulting microstructure. The microstructure of textile preforms and composites is deterministic and spatially periodic. The concept of "unit cell" was introduced to describe the repeat unit of the microstructure. Analysis methods and the theory of the unit cell were developed to characterize the properties of textile composites. Examples of preform architectures can be seen in Figure 10.

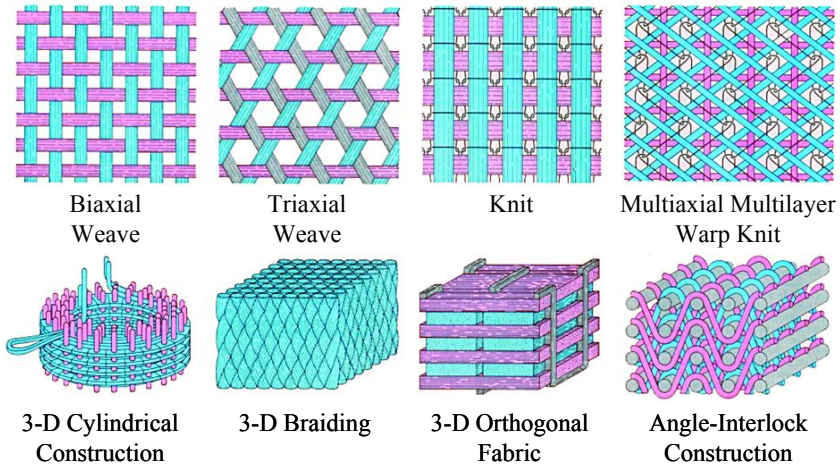

Figure 10. Preform architectures that can be used to support complex composite structures.[10]

The complicated microstructure of textile composites results in local perturbation in the stress-strain relationship. Local strain varies as a function of location and is different from the global strain of the composite. The difficulty is highlighted when traditional electrical strain gauges are mounted on the surface of textile composites. Lang and Chou [9] investigated the influence of strain gauges and unit size on the accuracy of global strain measurement. They found that the local deformation of the unit cell resulted in significant error when the unit cell was larger than the size of the strain gauge. The local deformation is also the source of cracking and failure initiation of textile composites. In order to measure local strain a sensor must be embedded into the preform; electrical strain gauges are usually large and are difficult to embed into the preform. By embedding multi-axis fiber optical Bragg grating sensors into complex weave structures it is possible to measure complex strain fields at multiple points interior to the structure.

These sensors are a very attractive proposition for deployment in textile composites because: (i) they can be used in aggressive and explosive environments where electrical based sensors may not survive or may be too dangerous to deployed; (ii) their circular cross section and relative small size make them easily integrated into composite preforms at time of manufacture, or they can be surface mounted on existing structure or components; (iii) the ability to multiplex a series of sensors along a single optic fiber to obtain distributed information of chemical composition, strain and temperature at specific location of composites is very advantageous for process of and condition monitoring; (iv) the deployment of a single optical fiber sensor designed for simultaneous and multiple measurements is very important.

By using the complex weave structures shown in Figure 10 it is possible to greatly increase the overall mechanical properties of the composite structure. As an example, a biaxial weave structure was used to support the fabrication of a small composite coupon for testing. Bi-axis fiber gratings were placed in the four-layer coupon between the first and second layers and between the second and third layers as show in Figure 11.

The multi-axis fiber grating strain sensors with an overall length of approximately 5 mm were aligned orthogonal to the weave structure, which has a period of approximately 2 mm. The result is that the axis of multi-axis fiber grating strain sensor that is orthogonal to the plane of the coupon has two primary components of transverse strain due to the biaxial weave structure, while the axis that is parallel to the plan of the coupon has one principal component of transverse strain due to the resin associated with the composite part of Figure 11.

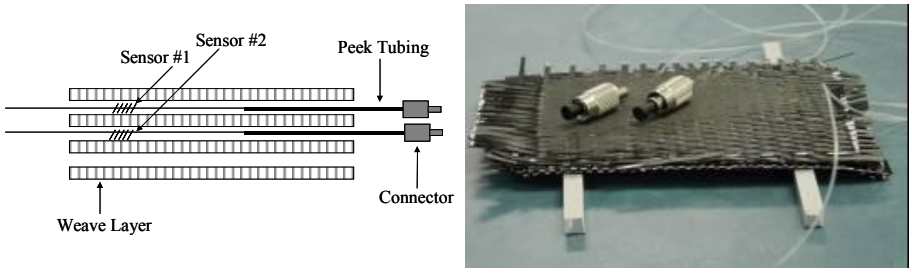

Figure 11. Multi-axis fiber grating strain sensors were placed between the first and second and second and third layers of a biaxial composite weave

When the part is curing the two spectral peaks associated with the multi-axis fiber grating sensor move toward longer wavelengths as the cure temperature rises, allowing the internal temperature of the composite part to be measured. The part shown in Figure 11 was constructed using prepreg tow material manufactured by ATK/Thiokol and has a cure temperature of 190 degrees C. When the part reaches this temperature the resin structure starts to cross link resulting in transverse and axial compression on the multi-axis fiber grating strain sensor. The overall spectral structure moves toward shorter wavelengths indicating compression in axial strain. In the transverse direction orthogonal to the plane of the part, after cure two principal peaks occur corresponding to the raised and lowered portion of the structure. Figure 12a shows the spectral peaks from the multi-axis fiber grating strain sensor in the upper portion of the composite part for the case orthogonal to the part. The two principal peaks corresponding the biaxial weave at spaced spectrally by 0.50 nm, which corresponds to a transverse strain difference of 1500 micro-strain. The amplitude of the spectral peaks indicates the relative length of the fiber grating subject to the specific transverse force. In the case of Figure 12a the principal peak is about 20 percent larger indicating that the length of the fiber grating subject to this loading is 20 percent

longer than that of the next largest peak. There is a third set of much smaller peaks again centered about 0.50 nm from the second peak and 1.0 nm from the first. These peaks correspond to transverse strain gradients over much shorter lengths of the fiber grating that are at transverse strain levels that are 1500 to 3000 micro-strain lower the second and first principal peaks respectively.

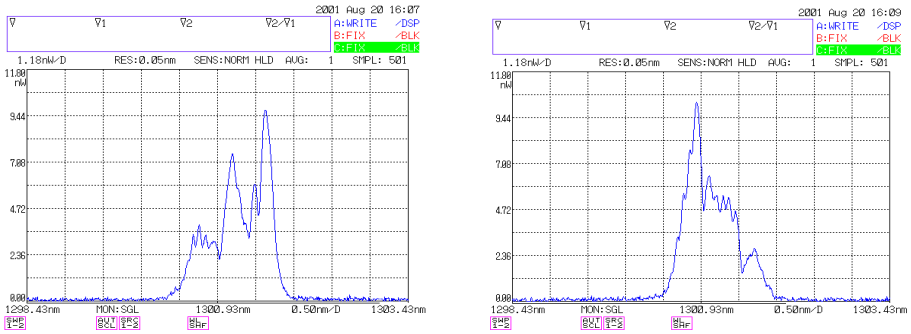

Figure 12. (a) Spectral response of the multi-axis fiber grating strain sensor along the axis orthogonal to the plane of the part is used to quantitatively measure multi-axis strain fields. (b) Spectral response of the multi-axis fiber grating strain sensor along the axis in the plane of the part to quantitatively measure multi-axis strain fields.

Figure 12b shows the axis that is aligned in the plane of the part. In this case the weave structure does not come in direct contact with this axis and there is one principal peak. Transverse strain gradients along this axis appear along relatively small lengths of the fiber grating.

Each of the principal orthogonal axes of the birefringent fiber can be interrogated individually by using a fiber polarizer placed in front of the light source in combination with a Lyot depolarizer. The experimental set up used to interrogate the coupon is shown in Figure 13a and 13b. A superradiant light source operating with a 2 mW output is directed into a fiber polarizer at 1300 nm. The output fiber polarizer is directed into a polarization controller that is used to align the input polarization state of the system to each of the orthogonal axes. In the situation associated with the coupon under test, the birefringent axis subject to the higher stress in the polarization preserving fiber is aligned in the orthogonal direction to the plane of the test coupon of Figure 13. This axis has a longer overall wavelength than the orthogonal axis allowing a straightforward method for identification. After a reading similar to that shown in Figure 14a the polarization controller is readjusted to optimize the spectral profile of the lower wavelength corresponding to the transverse axis in the plane of the part as in Figure 14b. An Ando 6317B optical spectrum analyzer was used to support the spectral measurements.

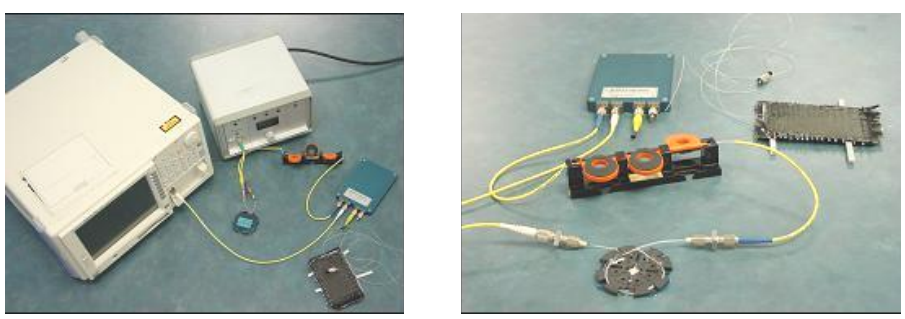

(a) **(b)**

Figure 13. (a) Readout of multi-axis strain from a bi-axial composite part using a superradiant diode for a light source, a polarization controller and polarization to direct the input polarization state, and a beamsplitter and optical spectrum analyzer for measuring the spectral output. (b) Close up view of the fiber polarizer, polarization controller, beamsplitter and test coupon.

Repeatability of the dual axis grating optical fiber sensor embedded in an e-glass/epoxy composite sample was evaluated using a loading-unloading cycle test; see Figure 14. The evaluation was conducted on an E-glass/epoxy composites sample with an embedded bi-axial grating optical fiber sensor. The results of this evaluation demonstrated that the signal from the bi-axial grating optical fiber sensor is repeatable.

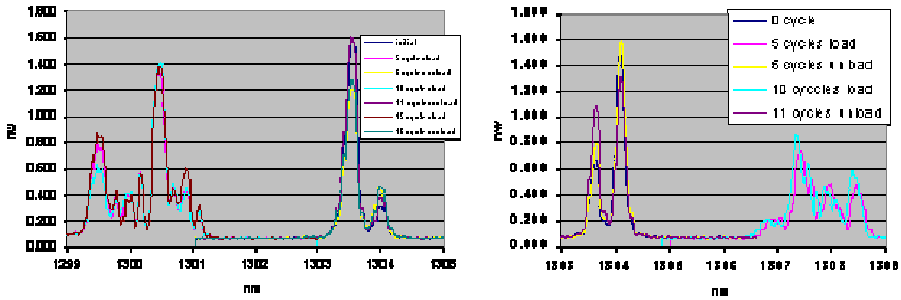

Figure 14. Bi-axial grating sensor embedded in E-glass/epoxy composites under (a) under cyclic compressive loading-unloading (0lb-400lb), left Peak, and (b) under cyclic tensile loading-unloading (0lb-400lb), left peak

Both single and multi-axis fiber grating strain sensors were used in the pervious experiments to monitor, axial strain, transverse strain and transverse strain gradients in complex, woven composite structures. Results showed that the bi-axial fiber grating strain sensors had superior transverse strain sensitivity and more importantly allowed the direction and magnitude of the transverse strains and transverse strain gradients to be measured. These sensors may be multiplexed in a straightforward manner using wavelength division multiplexing to map out strain fields over a wide area in the interior of composite parts.

The bi-axial strain sensing capabilities have useful applications in health monitoring for crack detection and damage assessment beyond the capabilities of single axis fiber grating strain sensors.

REFERENCES

1. E. Udd, ed., *Fiber Optic Sensors, An Introduction for Engineers and Scientists,* John Wiley & Sons Ltd, New York, New York (1991).
2. E. Udd, ed., *Fiber Optic Smart Structures,* John Wiley & Sons Ltd, New York, New York (1995).
3. J.M. Lopez-Higuera, Ed., *Handbook of Optical Fibre Sensing Technology,* John Wiley & Sons Ltd, West Sussex, England (2002).
4. E. Udd, "An Overview of Fiber-Optic Sensors," *Review of Scientific Instruments,* **66** (8), 4015-5030 (1995).
5. R. Kashyap and J.M. Lopez-Higuera, "Fiber Grating Technology: Theory, Photosensitivity, Fabrication and Characterization," *Handbook of Optical Fibre Sensing Technology,* J.M. Lopez-Higuera, Ed., pp. 350-377, John Wiley & Sons Ltd, West Sussex, England (2002).
6. E. Udd, W.L. Schulz, J.M. Seim, E. Haugse, A. Trego, P.E. Johnson, T.E. Bennett, D.V. Nelson, A. Makino, "Multidimensional Strain Field Measurements using Fiber Optic Grating Sensors," *Proc. SPIE* **3986**, 254 (2000).
7. D.V. Nelson, A. Makino, C. Lawrence, J. Seim, W. Schulz, E. Udd, "Determination of the K-Matrix for the Multi-parameter Fiber Grating Sensor in AD072 Fibercore Fiber," *Proc. SPIE* **3489**, 79 (1998).
8. W.L. Schulz, E. Udd, J.M. Seim, A. Trego, I.M. Perez, "Progress on Monitoring of Adhesive Joints using Multiaxis Fiber Grating Sensors," *Proc. SPIE* **3991**, 52 (2000).
9. E.J. Lang and T-W. Chou, The Effect of Strain Gage Size on Measurement Errors in Textile Composite Materials, Composites Science and Technology, 58 (1998).
10. C. Black, E. Udd, W.L. Schulz, S. Kreger, M. Kunzler, T. Taylor, R. Lumsden, "Using Multi-Axis Fiber Grating Strain Sensors to Measure Transverse Strain and Transverse Strain Gradients in Composite Materials with Complex Weave Structures," *Proc. SPIE* **4694**, 162 (2002).